ECEN 153 HW 8

Dylan Tremblay

1. clk=1

A	B	Vout
0	0	1
0	1	1
1	0	0
1	1	1

eval

clk=0

A	B	Vout
0	0	1
0	1	1
1	0	1
1	1	1

precharge

a. The left and right sections are sequential. The middle is combinational.

b. $V_{out1} = \bar{A} + B$

c. clk low = precharge
clk high = evaluation

d. If A→1 after clk→1, and B=0, Vout₁ won't fall to 0 like expected

e. Use Domino logic or buffer stages

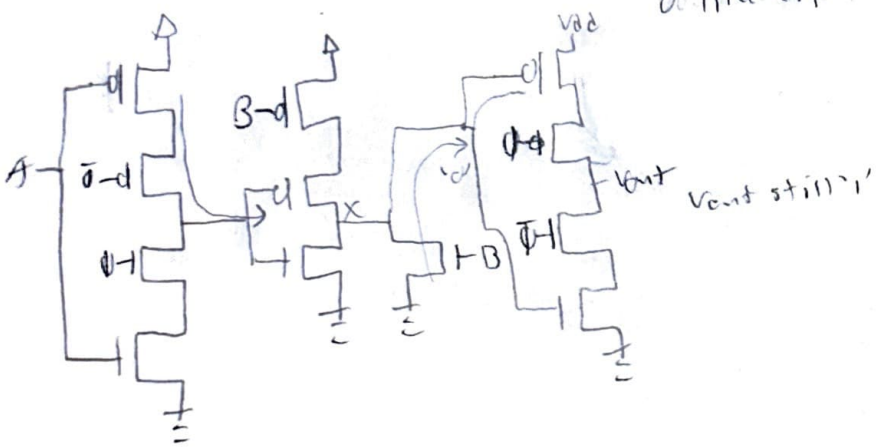

2. All Rs are same

Dominant time const for N equal segs = $R\left(\frac{N+1}{2N}\right)$ maybe

$R = .07\left(\frac{5000}{3}\right) = 116.67\,\Omega$

$C = \frac{.035fF}{\mu m^2}(5000)(3) + \frac{.045fF}{\mu m}(5000)(2) = 975\,fF$ $\quad C_{buff} = 504\,F$

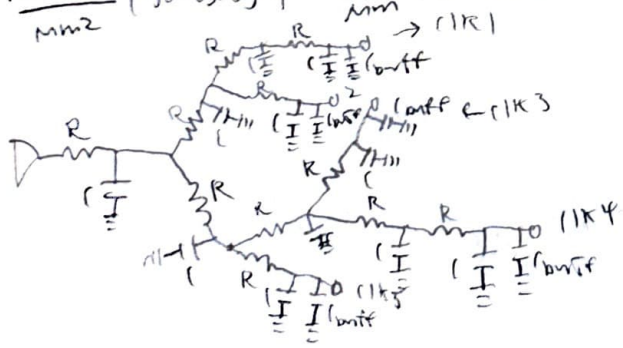

$C1 = RC + 2RC + 3RC + 4R(C + C_{buff}) + 2R(C + C_{buff}) + R(6C + 3C_{buff}) = 2.10006\times10^{-9}\,s$

$C2 = RC + 2RC + 3R(C + C_{buff}) + 2R(2C + C_{buff}) + R(6C + 3C_{buff}) = 1.86672\times10^{-9}\,s$

$C3 = RC + 2RC + 3RC + 4R(C + C_{buff}) + 3R(2C + C_{buff}) + 2R(C + C_{buff}) + R(4C + 2C_{buff}) = 2.56674\times10^{-9}\,s$

$C4 = RC + 2RC + 3RC + 4RC + 5R(C + C_{buff}) + 3R(C + C_{buff}) + 2R(C + C_{buff}) + R(4C + 2C_{buff}) = 2.80008\times10^{-9}\,s$

$C5 = RC + 2RC + 3R(C + C_{buff}) + 2R(3C + C_{buff}) + 2R(C + C_{buff}) + R(4C + 2C_{buff}) = 2.10006\times10^{-9}\,s$

Dominant time constant is C4's (2.8 ns)

3. per 1nm

$R = .07\left(\frac{1000}{20}\right) = 3.5\,\Omega$

$C = .035(1000)(20) + .045(1000)(2) = 790\,fF$

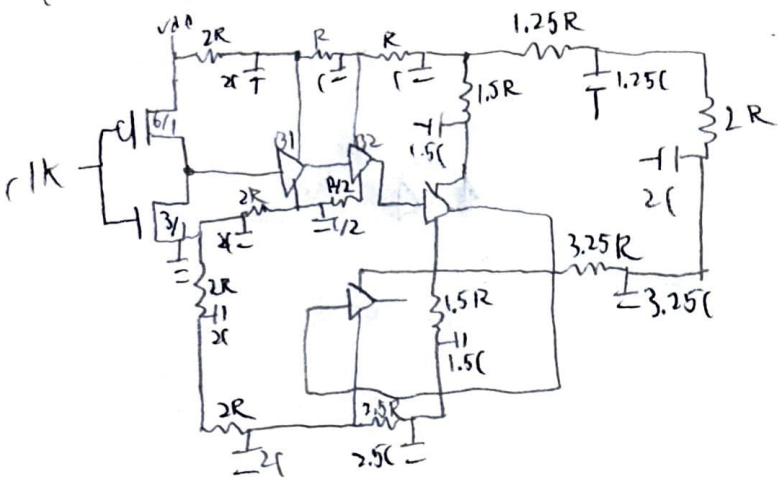

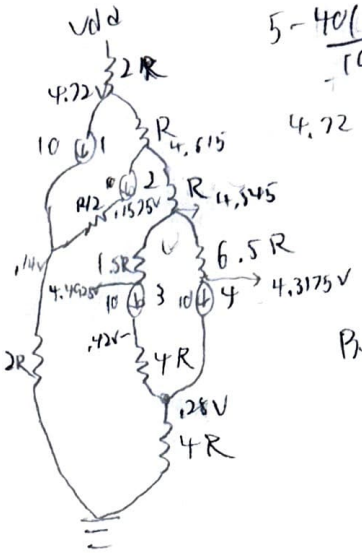

$5 - \frac{40(2R)}{1000} = 4.72\,V$

$4.72 - \frac{30(R)}{1000} = 4.615$

and so on

Buffer 4 swing!

$4.3175 - .28 =$

$\boxed{4.0375\,V}$

b. Probably. It depends on how sensitive the margins are. We'll say this is enough to cause malfunction.

4.

a. $Z_0 = \sqrt{\frac{L}{C}} = \sqrt{\frac{750\times10^{-9}}{75\times10^{-12}}} = 100\,\Omega$

$t_f = \sqrt{LC} = \sqrt{750\times10^{-9}(.15)(.15)\,75\times10^{-12}}$

$= 1.125\times10^{-9}\,s$

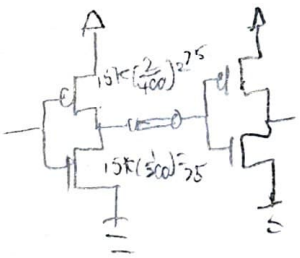

b. $Z_0 = 100\,\Omega$ $Z_L = \infty\,\Omega$

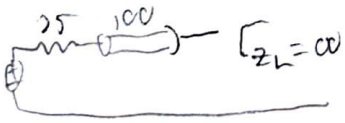

$P_{source} = \frac{25-100}{25+100} = -\frac{1}{5}$

$P_{dest} = \frac{\infty-100}{\infty+100} = \frac{1-\frac{100}{\infty}}{1+\frac{100}{\infty}} = 1$

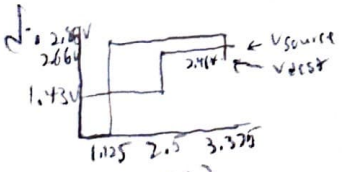

c. We want driver res to match Z_0.

so $15K\left(\frac{1}{x}\right) = 100$

$x = 150$

resize NMOS to W/L of 150/.25 and PMOS to 300/.25.

c. $P_S = -\frac{1}{5}$ $P_D = 1$

$2.5\left(\frac{100}{175}\right) = 1.43$

$1.43 + 1.43 = 2.86$

1.43

$2.86 - .2$

2.66

$-.2$

2.46 ← v/in 5% of final after 3tf

$-.2$

$2.46 + (.2)\left(-\frac{1}{5}\right)$

$.03$

$2.49 + .03$

$3(1.125) =$

$\boxed{3.375\,ns}$

$2.52 - \frac{1}{5}(.03)$

$.03$